FUJI Inverters FVR-G5S

400V Series 2.2 to 22 kW

Instruction Manual

Contents

Fuji Electric Co., Ltd.

Program protection

Program protection can be provided so as to prevent the selecting function and data codes from being changed due to the user's misoperation causing troubles.

i) PROGRAM protection procedure

① Press the PRG key 0 0
(PROGRAM mode selection)

② Press the STOP key and hold it while pressing the SET key 0 0 1
(PROGRAM protection)

③ Press the PRG key .....
(PROGRAM mode resetting)

ii) PROGRAM protection clearing procedure

① Press the PRG key 0 0
(PROGRAM mode selecting)

② Press the STOP key and hold it while pressing the RESET key 0 0 0
(PROGRAM protection clearing)

③ Press the PRG key .....
(PROGRAM mode resetting)

* When changing the function and data codes, clear the PROGRAM protection.

Using the operating panel

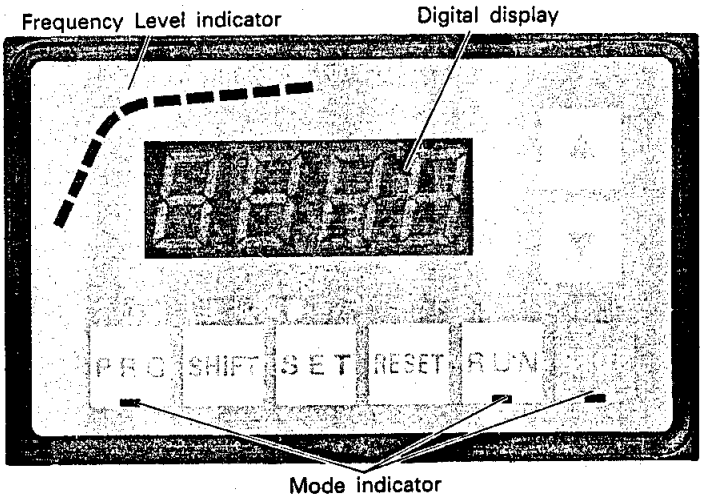

(1) Operating panel operation

- Frequency setting: To change the setting frequency, use the [△] [▽] up/down keys. [SET] key is used to write to the EEPROM.
- Operating: To operate, use the [RUN] key. Actual frequency is displayed.
- Stopping: To stop the operation, use the [STOP] key, Setting frequency flashes.

(2) Changing the function/data codes

- STOP mode: Check that the [STOP] lamp lights up when the STOP key is pressed.
- Accessing of the PROGRAM mode: Check that the lamp lights up when the [PRG] key is pressed.
- Accessing of the function code: Press the [SHIFT] key.
- Accessing of the data code: Press the [△] [▽] up/down keys.
- Storing of the code setting: Press the [SET] key.
- Exiting of the PROGRAM mode: Check the [PRG] lamp goes out and [STOP] lamp lights up.

Mode, display and operating key functions

The display section and the function of the operating keys vary depending on mode.

Mode		PROGRAM mode	RUN mode	STOP mode	TRIP mode
Mode indicator		[PRG] [RUN] [STOP]	[PRG] [RUN] [STOP]	[PRG] [RUN] [STOP]	[PRG] [RUN] [STOP]
Digital display example		Function code and Data code 1018	Output Hz or Amps 60.00 (Hz) 123.8 (A)	Setting Hz (flashing) 60.00	Cause of trip 0C1
Frequency Level indicator		—	Output Hz display	Setting Hz display	—
Operating key	[△] / [▽]	Accessing the data code	Hz setting	Hz setting	-
	[PRG]	Exiting the PROGRAM mode	-	Accessing the PROGRAM mode	-
	[SHIFT]	Accessing the function code	Hz-Amp display selecting	-	-
	[SET]	Storing the code	Storing the Hz setting value	Storing the Hz setting value	-
	[RESET]	Resetting the data code	-	-	Resetting the TRIP mode
	[RUN]	-	-	Starting	-
	[STOP]	-	Stopping	-	-

1. Introduction

Before installing or operating the inverter, read this manual carefully to ensure maximum performance.

2. Visual inspection of the inverter upon receipt

Upon receipt of the inverter, carefully inspect that it is as specified when ordering, referring to the rating plate on the front cover.

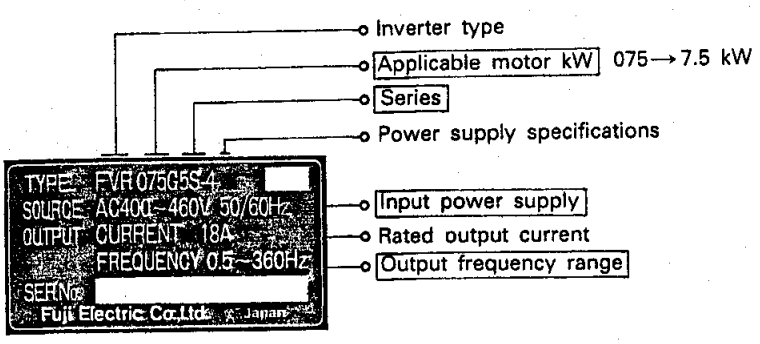

Rating plate

Important item to be checked

If, by any chance, depression in the cover, damage to the parts, missing parts are found, please contact FUJI.

3. Construction

1) Name

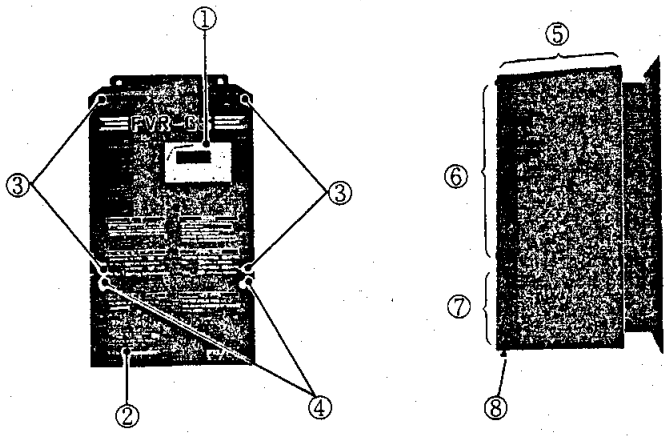

① Operating panel
② Rating plate
③ Phillips screw
④ Screws
⑤ Upper cover
⑥ Inverter unit cover
⑦ Terminal cover
⑧ Pin

2) Removing the front cover

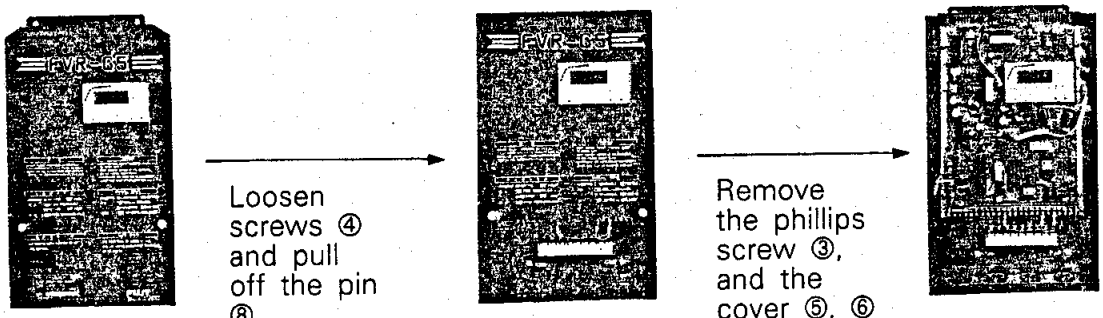

(A)

Loosen screws ④ and pull off the pin ⑧.

(B)

Remove the phillips screw ③, and the cover ⑤, ⑥ will be detached.

(C)

* In case of the inverter install in the power-board, structure of the inverter change from (A) into (C).

4. Installation

1) Environment

Install the inverter in a place where temperature and humidity are below 40°C and 90% respectively. Avoid a location where the inverter is exposed to the direct sun light and subjected to dust, corrosive fumes or excessive vibration.

2) Mounting direction and space

i) Direction
Mount the unit vertically so that "FVR-G5" can be seen in its front.

ii) Space
The inverter generates heat during operation. Allow a sufficient space around the unit as shown in the illustration on the right.

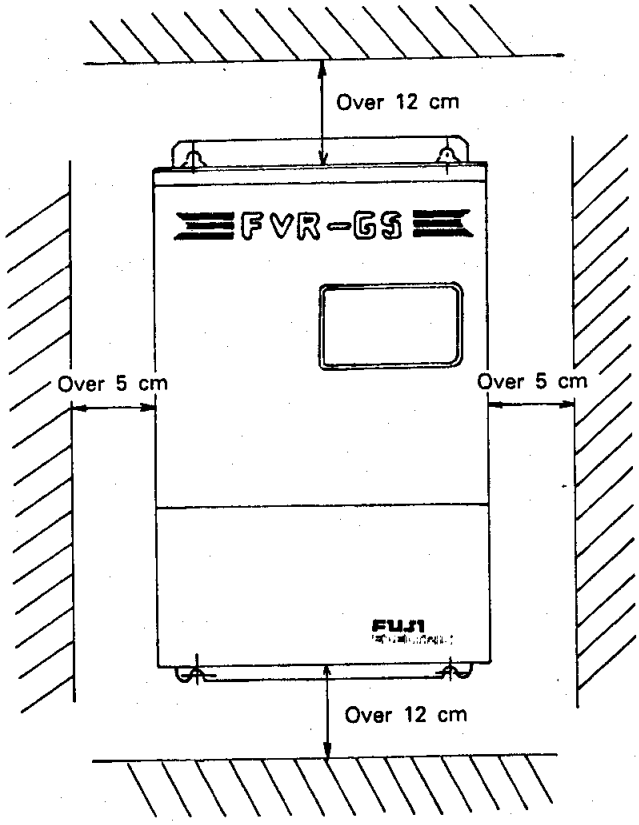

3) Mounting in the control cubicle

The dimensions differ depending on cooling method. For further information please refer to the technical data for panel design.

Note: FVR-G5S comprises a variety of electronic parts including CPU and ROM. Install the unit so that it is far away from the noise source.

5. Wiring

1) FUJI factory wiring

Remove the terminal cover and you will see the main and control circuit terminals. When shipped from the FUJI factory they are connected as shown in the drawing on the right. This permits an operating panel operation.

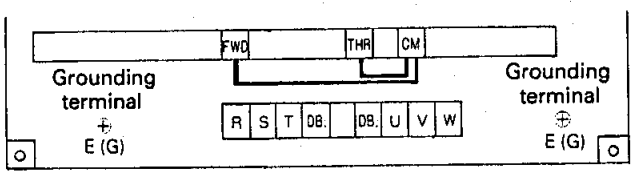

2) Wiring the main circuit terminal

i) Power supply connections (R.S.T.)
The phase sequence does not matter for rotative direction of motor.

ii) Motor connections (U.V.W.)
When connected normally, the motor rotates counterclockwise when seen from the load side. When the rotation is reversed, interchange any 2 motor connections at the U, V and W terminals.

iii) Ground terminal connections
Be sure to ground the inverter so as to prevent the malfunctions due to external noise pick up.

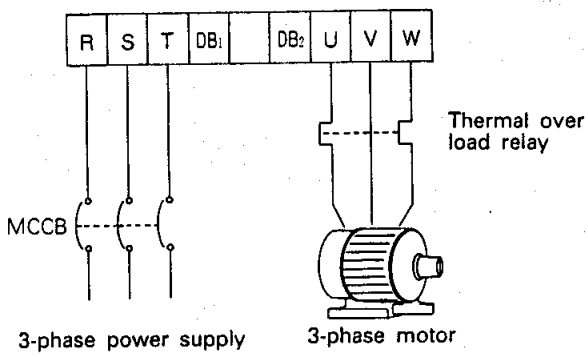

[Warning]

Misconnection of the power supply to the motor terminals U, V and W will damage the inverter.

3) Wiring the Control terminal

i) Keypad operation (Panel operation)

It is unnecessary to modify the wiring after shipment from the FUJI factory. When connecting an external braking unit, please refer to the Paragraph 4).

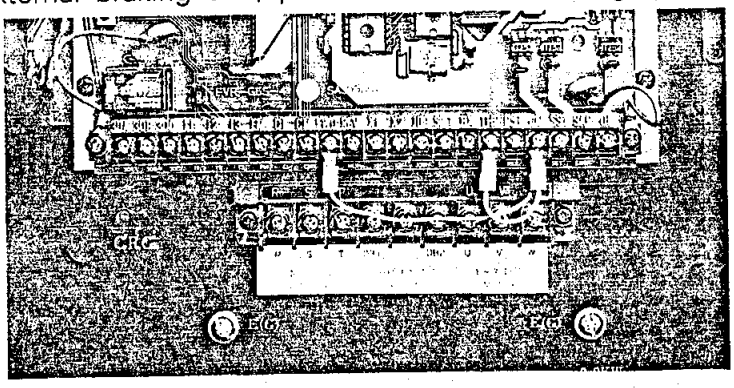

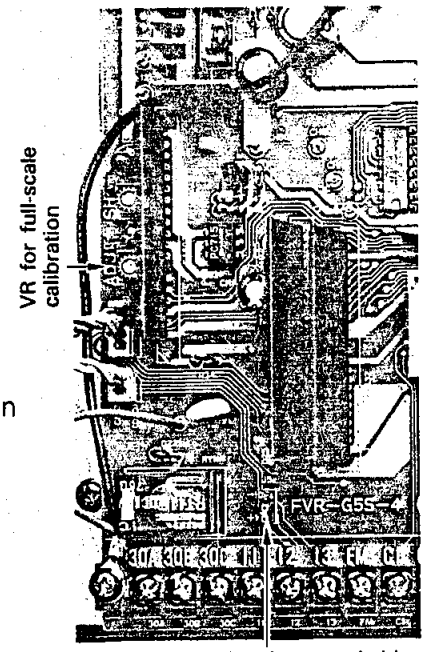

*4 Voltage setting input switching pin Set at 0 to +10 V when shipped from the FUJI factory.

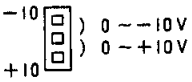

ii) Control terminal operation (external operation)

Carry out the wiring referring to the drawing below. For explanation of the terminals refer to the Paragraph 11-2).

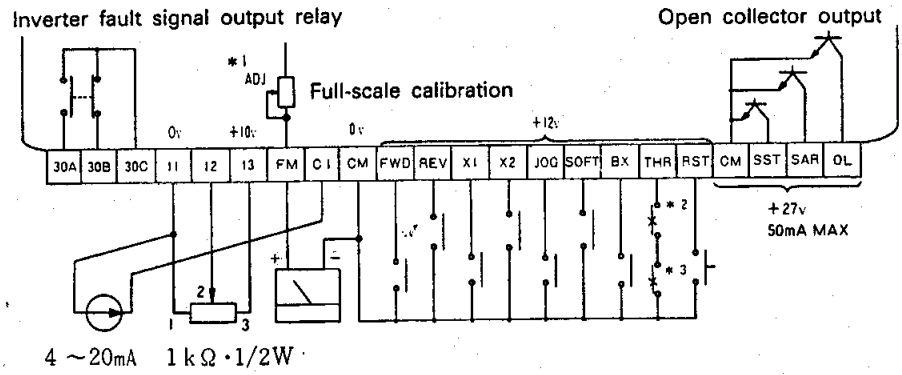

When the current and voltage are inputted simultaneously, they are added and the resulted value will be set.

*1: When using a voltmeter of full-scale, 7 V or less.
*2: External DB resistor unit thermostat (Normally closed contact)
*3: Motor protective thermal overload relay (Normally closed contact)
*4: This switch is used when the voltage input is from 0 to −10 V.

[Warning]

1. Separate the control wiring from the main circuit wiring as far as possible to prevent mulfunction due to noise interference. Never run them in the same conduit. When they are intersecting each other, arrange so that they meet at right angles.
2. When wiring, use twisted or shielded wire. Avoid excessive wire lengths of wiring. (Grounding of shilded wires must be carried out on the inverter side.)

4) Wiring the external DB braking resistor unit (Option)

When requiring frequent braking or a high torque braking, connect an option external DB braking unit as shown in the drawing on the right.

* Remove jumpers across CM-THR connected when shipped from the FUJI factory.

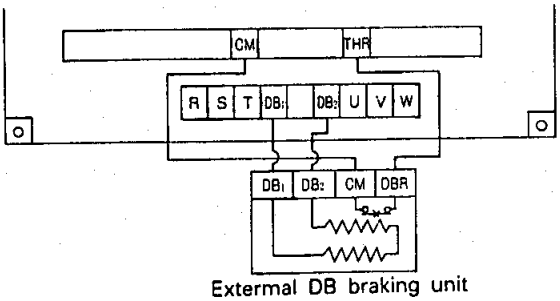

Extermal DB braking unit

[Warning]

1. If, by any chance, DB1 and DB2 are short-circuited, the inverter will be damaged.
2. Standard type inverter eguipped no DB transistor can't apply the external DB braking resistor unit.

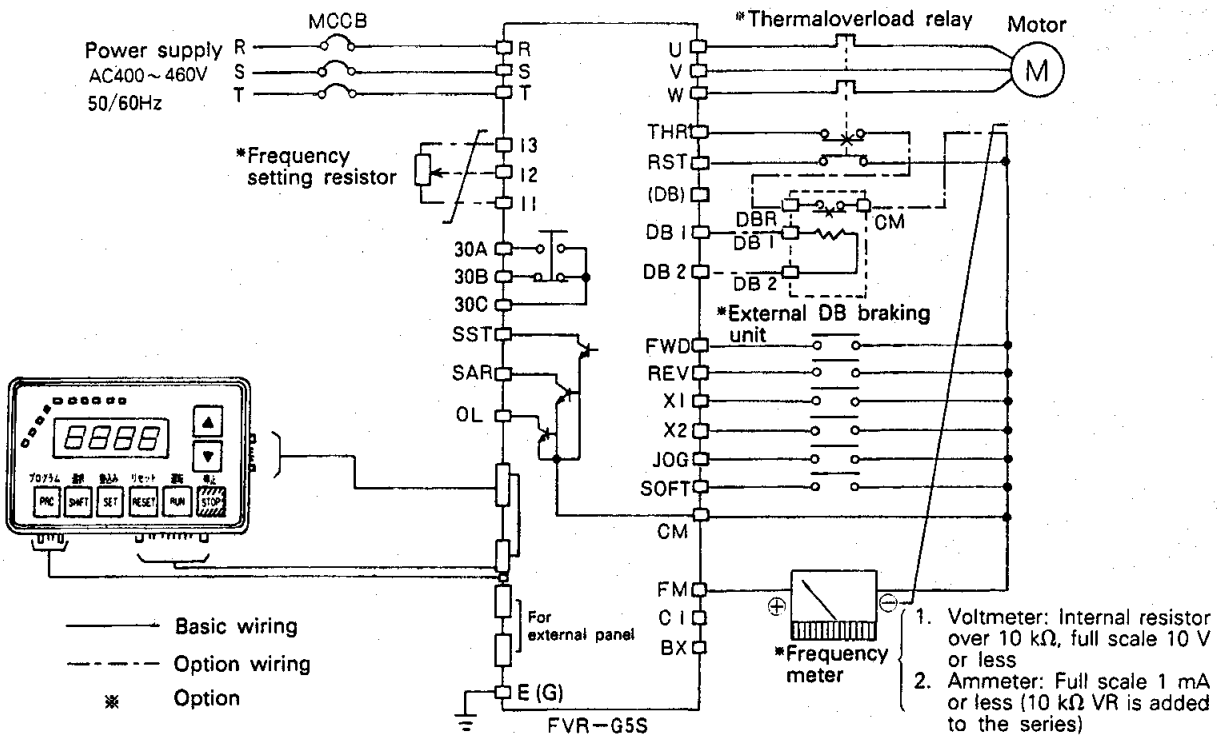

* Standard type inverter equipped no DB transistor can't apply the external DB braking resistor unit.

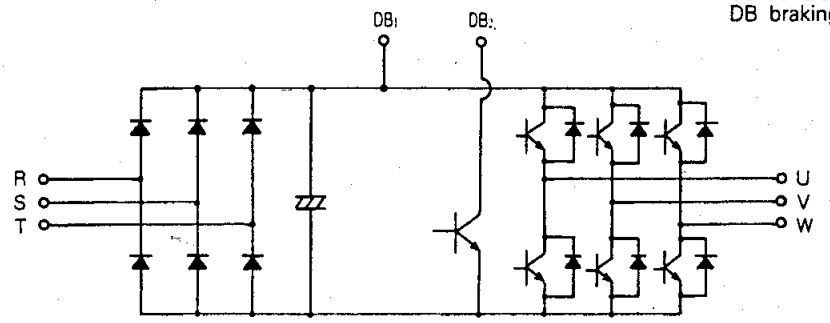

Inverter main circuit diagram

6. Operating panel

1) Names and functions

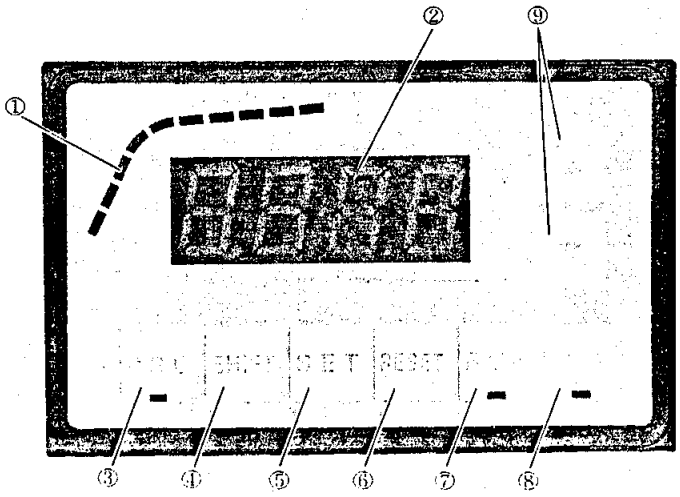

① Frequency Level indicator The output frequency is displayed in percent.
② Digital display The output frequency·output current/function·data code/trip message are displayed.
③ PROGRAM mode accessing and exiting key
④ Function code selecting key
⑤ Storing key
⑥ TRIP mode reset key
⑦ RUN command key
⑧ STOP command key
⑨ Operating frequency setting/data code selecting key

2) Setting the function and data codes

The function of the display and operating keys varies depending on mode.

Mode		PROGRAM mode	RUN mode	STOP mode	TRIP mode
Mode indicator		PRG RUN STOP	PRG RUN STOP	PRG RUN STOP	PRG RUN STOP
Digital display example		Function code and Data code 1018	Output Hz or Amps 60.00 (Hz) 12.3A (A)	Setting Hz (flashing) 60.00	Cause of trip 0C1
Frequency Level indicator		—	Output Hz display	Setting Hz display	—
Operating key	△ / ▽	Accessing the data code	Hz setting	Hz setting	–
	PRG	Exiting the PROGRAM mode	–	Accessing the PROGRAM mode	–
	SHIFT	Accessing the function code	Hz-Amp display selecting	–	–
	SET	Storing the code	Storing the Hz setting value	Storing the Hz setting value	–
	RESET	Resetting the data code	–	–	Resetting the TRIP mode
	RUN	–	–	Starting	–
	STOP	–	Stopping	–	–

Set to the PROGRAM mode (PRG lights up.) and operate the following keys.

SHIFT : This key is used to select the function code. When this key is pressed, the left hand two digits increments from 00 to 01 one at a time and when 28 is reached, they return to 00 .

△ ▽ : To select the data code, use this key. When the △ key is pressed, the right hand 2 digits increments one at a time and when the ▽ key is pressed, the right hand 2 digits decrement one at a time.

SET : This key is used to store the function code and data code. When requiring to store two or more function and data codes, press this SET key every time the function or data code is stored. Stored data will not be volatile even when the power supply is removed.

[Example] When setting 1018 .

① Press the PRG key. (PROGRAM mode selection) 00
② Press the SHIFT key. Select 10 for the left hand 2 digits. (Function code selection) 10
③ Press the △ and ▽ keys so as to set the right hand 2 digits at 18. (Data code setting) 1018
④ Press the SET key. (Function and data code storing) 1018
⑤ Press the PRG key. (PROGRAM mode resetting) ..... (Flashes)

7. Description of functions

1) Changing function

i) Display changing 00

This is used to select the display of the digital display between output frequency and output current.

0000 : Frequency display — Factory setting 0000

0001 : Current display

* The changing of the display content can also be carried out by using the SHIFT key, during operation.

ii) Overspeed limiter 15

This function is used to limit the output frequency to 150 Hz or less so as to prevent the motor overspeed due to incorrect setting of the V/F pattern.

1500 : Operation can not be carried out when 150 Hz is exceeded.

1501 : Operation can be carried out even when 150 Hz is exceeded. Factory setting 1500

* When frequency pattern exceeding 150 Hz is set, change the data into 1501. Otherwise, the output frequency exceeding 150 Hz can not be outputted.

iii) Keypad panel operation·external operation selection 19

RUN / STOP command can be inputted via terminals FWD and REV (external operation) or keypad operation. The external operation permits the addition of either the automatic V/F operation (automatic accelerating operation) or automatic torque boost (automatic energy-saving operation).

1900 : External operation

1901 : External Automatic V/F (automatic accelerating operation)

1902 : External automatic torque boost (automatic energy-saving operation)

1903 : Keypad panel operation Factory setting 1903

iv) Brake torque selection 23

When requiring a high braking torque as in the case of abrupt deceleration of a load with large GD^2, a high torque brake is selected. However, in the standard type of inverter it is necessary that a option brake unit (transistor switch) is installed internally and a option DB resistor is installed externally.

When an DC brake is selected, the DC brake operates for a period of 0.1 sec at 0.5 Hz or less and the motor will come to a complete standstill.

2300 : Normal brake

2301 : High torque brake

2302 : DC brake Factory setting 2300

* Even when a DC brake is selected, the normal brake operates up to 0.5 Hz.

v) Frequency setting method selection (analog/digital) 25

When the frequency setting is carried out from outside, the input method can be selected as required.

2500 : Operating panel input (Digital setting)

2501 : Control terminal input (Analog setting)

2502 : Binary code input } Use the OPC-4 option card.

2503 : BCD code input } (Digital setting) Factory setting 2500

* When using 2503, it is necessary to change for a special ROM.

vi) Operating panel selection 27

The input selection is carried out between the inverter front operating panel and the option OPC-09 remote control panel.

When the option OPC-09 is not used, no change is necessary from what is set when shipped from the FUJI factory.

2700 : Front operating panel

2701 : Remote control panel (OPC-09) Factory setting 2700

* In case of removing the front operating panel for using the remote operating panel, don't change the date code of function code 27 to 00. (It makes uncontrollable to operate the inverter.)

2) General-purpose function

i) Multistep speed and jogging speed 01 02 03 04

The multistep speed and jogging speed (frequency) can be set independently. The frequency that can be set, varies depending on V/F pattern code when the function code 10 is selected. Select an frequency desired to set referring to the frequency code table. Set a data code (0 to 50, 0 to 60) for each function code.

		Factory setting
Multistep speed 1 01	Frequency code + □□ (00~50, 00~60)	0110
Multistep speed 2 02		0220
Multistep speed 3 03		0330
Jogging speed 04		0405

* Do not set frequencies other than those listed in the frequency code table.

Frequency Code Table Unit: Hz

Frequency code \ V/F pattern	00	01	02,10	03,11 18	04,12	05,13	06,14	07,15	08,16	09,17
00	0	–	0	–	0	–	0	–	0	–
01	1	–	2	–	3	–	4	–	6	–
02	2	–	4	–	6	–	8	–	12	–
03	3	–	6	–	9	–	12	–	18	–
04	4	–	8	–	12	–	16	–	24	–
05	5	–	10	–	15	–	20	–	30	–
06	6	–	12	–	18	–	24	–	36	–
07	7	–	14	–	21	–	28	–	42	–
08	8	–	16	–	24	–	32	–	48	–
09	9	–	18	–	27	–	36	–	54	–
10	10	–	20	–	30	–	40	–	60	–
11	11	–	22	–	33	–	44	–	66	–
12	12	–	24	–	36	–	48	–	72	–
13	13	–	26	–	39	–	52	–	78	–
14	14	–	28	–	42	–	56	–	84	–
15	15	–	30	–	45	–	60	–	90	–
16	16	–	32	–	48	–	64	–	96	–
17	17	–	34	–	51	–	68	–	102	–
18	18	–	36	–	54	–	72	–	108	–
19	19	–	38	–	57	–	76	–	114	–
20	20	–	40	–	60	–	80	–	120	–
21	21	–	42	–	63	–	84	–	126	–
22	22	–	44	–	66	–	88	–	132	–
23	23	–	46	–	69	–	92	–	138	–
24	24	–	48	–	72	–	96	–	144	–
25	25	–	50	–	75	–	100	–	150	–
26	26	–	52	–	78	–	104	–	156	–
27	27	–	54	–	81	–	108	–	162	–
28	28	–	56	–	84	–	112	–	168	–
29	29	–	58	–	87	–	116	–	174	–
30	30	–	60	–	90	–	120	–	180	–

Frequency code \ V/F pattern	00	01	02,10	03,11 18	04,12	05,13	06,14	07,15	08,16	09,17
31	31	–	62	–	93	–	124	–	186	–
32	32	–	64	–	96	–	128	–	192	–
33	33	–	66	–	99	–	132	–	198	–
34	34	–	68	–	102	–	136	–	204	–
35	35	–	70	–	105	–	140	–	210	–
36	36	–	72	–	108	–	144	–	216	–
37	37	–	74	–	111	–	148	–	222	–
38	38	–	76	–	114	–	152	–	228	–
39	39	–	78	–	117	–	156	–	234	–
40	40	–	80	–	120	–	160	–	240	–
41	41	–	82	–	123	–	164	–	246	–
42	42	–	84	–	126	–	168	–	252	–
43	43	–	86	–	129	–	172	–	258	–
44	44	–	88	–	132	–	176	–	264	–
45	45	–	90	–	135	–	180	–	270	–
46	46	–	92	–	138	–	184	–	276	–
47	47	–	94	–	141	–	188	–	282	–
48	48	–	96	–	144	–	192	–	288	–
49	49	–	98	–	147	–	196	–	294	–
50	50	–	100	–	150	–	200	–	300	–
51		51		102		153		204		306
52		52		104		156		208		312
53		53		106		159		212		318
54		54		108		162		216		324
55		55		110		165		220		330
56		56		112		168		224		336
57		57		114		171		228		342
58		58		116		174		232		348
59		59		118		177		236		354
60		60		120		180		240		360

ii) Acceleration time (ACCEL 1), deceleration time (DECEL 1) and accel/decel time (ACCEL/DECEL 2) 05 06 07

32 different acceleration and deceleration times can be set which include abrupt acceleration and deceleration, and soft start and soft stop. The accel/decel time code table lists the times elapsed until the set output frequency (60 Hz) is reached from 0 Hz after the starting signal has been applied. This ratio will not change within the range 0 to 360 Hz.

		Factory setting
ACCEL 1 05	Acceleration deceleration time code + □□ (00~31)	0516
DECEL 1 06		0616
ACCEL/DECEL 2 ..... 07 (Commonly used with acceleration and deceleration time)		0716

Acceleration and Deceleration Time Code Table

Data code	00	01	02	03	04	05	06	07	08	09	10	11	12	13	14	15
ACCEL/DECEL time (sec)	0.06	0.08	0.12	0.16	0.23	0.32	0.45	0.60	0.85	1.2	1.7	2.3	3.2	4.5	6.5	9.0

Data code	16	17	18	19	20	21	22	23	24	25	26	27	28	29	30	31
ACCEL/DECEL time (sec)	12	17	24	33	45	65	90	125	175	245	340	475	660	925	1300	1800

[Example]

When requiring a 4-pole motor to be accelerated up to 3600 rpm in 5 sec from its standstill state,

1) Obtain the inverter output frequency at 3600 rpm. (The slip is zero.)

$$\frac{3600 \times 4}{120} = 120 \text{ [Hz]}$$

2) Obtain the time elapsed until the output frequency changes by 60 Hz.

$$\frac{60}{120-0} \times 5 = 2.5 \text{ [sec]}$$

3) Set the data code referring to the acceleration deceleration time code table so that it has an acceleration time that approaches the value obtained from paragraph 2). It is 11 (2.3 sec) in this case.

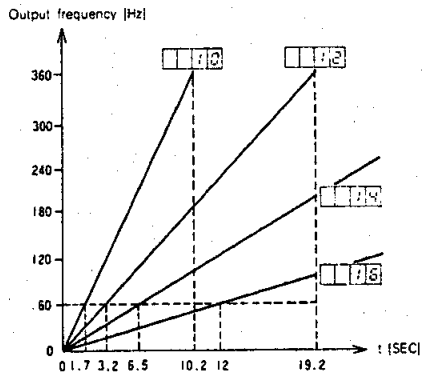

Change in output frequency depending on acceleration and deceleration time.

[Warning]

1. Set the acceleration or deceleration time somewhat longer with due attention given to the power supply voltage and load fluctuation.
2. When the acceleration time is too short for the load condition, the overcurrent protection function (OC1 display) will operate and the motor will coast to a stop.
3. When the deceleration time is too short for the load condition the overcurrent protection function (OC2 display) or overvoltage protection function (OU display) will operate trip and the motor will coast to a stop.

iii) Electronic thermal overload 08

FUJI inverters can provide an overload protection of standard 3-phase 4-pole induction motor without an external thermal overload relay. This electronic thermal overload relay can provide protection in the area exceeding 10 Hz. Obtain the continuous allowable current I_{100} (ratio against the inverter rated current) [%] using the following formula and set the data code to match the value referring to the thermal overload level code table.

$$I_{100} = \frac{K \times (\text{Motor rated current})}{(\text{Inverter rated current})} \times 100 \text{ [\%]}$$

K = 1.0 (Rated frequency 50 [Hz])
K = 1.1 (Rated frequency 60 [Hz])

Electronic thermal overload level code table

Data code	00	01	02	03	04	05	06	07	08	09	10	11	12	13	14	15
I_{100} [%]	No operation	96 ~ 100	91 ~ 95	86 ~ 90	81 ~ 85	76 ~ 80	71 ~ 75	66 ~ 70	61 ~ 65	56 ~ 60	51 ~ 55	46 ~ 50	41 ~ 45	36 ~ 40	31 ~ 35	26 ~ 30

Factory setting 0800

[Example]

When driving a standard motor of 7.5 kW, 60 Hz by using a FVR075G5S, the inverter rated current is 18 [A] and the motor rated current 14 [A] (FUJI data).

Therefore,

$$I_{100} = \frac{1.1 \times 14}{18} \times 100 = 86 \text{ [\%]}$$

Set the program code 0803 referring to the thermal overload level code table.

[Warning]

1. When the electronic thermal overload relay is not used, set to 0800 so as to prevent fault.
2. The elctronic thermal overload relay can not provide protection for loads in which frequent star-up can be expected or press loads.

iv) Torque boost 09

16 selectable torque boosts are available for selection depending on constant torque load and variable torque load. Obtain a boost pattern (A, B or C) from the preset V/F pattern. Then, obtain optimum torque boost from the A (B or C) curve and set the data code (00 to 15) referring to the boost pattern code table.

V/F pattern Table

V/F pattern	00	01	02	03	04	05	06	07	08	09	10	11	12	13	14	15	16	17
Boost pattern	A	A	B	B	B	B	B	B	B	B	C	C	C	C	C	C	C	C

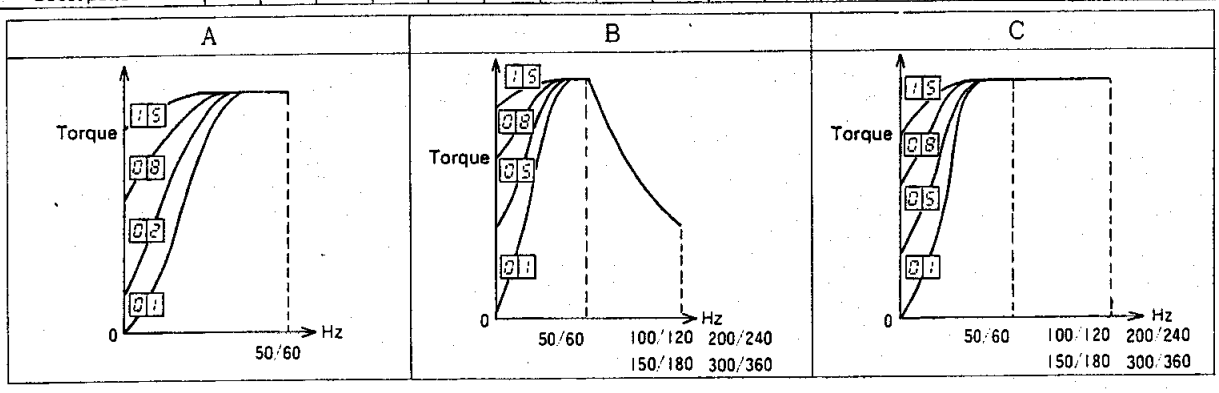

Torque Boost Pattern Code Table

Data code	00	01	02	03	04	05	06	07	08	09	10	11	12	13	14	15
Starting torque	Low ←															→ High

Factory setting 0908

* When the torque boost is too high, high motor sound can be expected, overcurrent trip may result at low speeds or the electronic thermal overload relay may operate.

v) V/F pattern 10

Select one out of 19 V/F patterns depending on the base frequency (rated frequency) and the maximum frequency of the motor.

Factory setting 1001

V/F Pattern Table

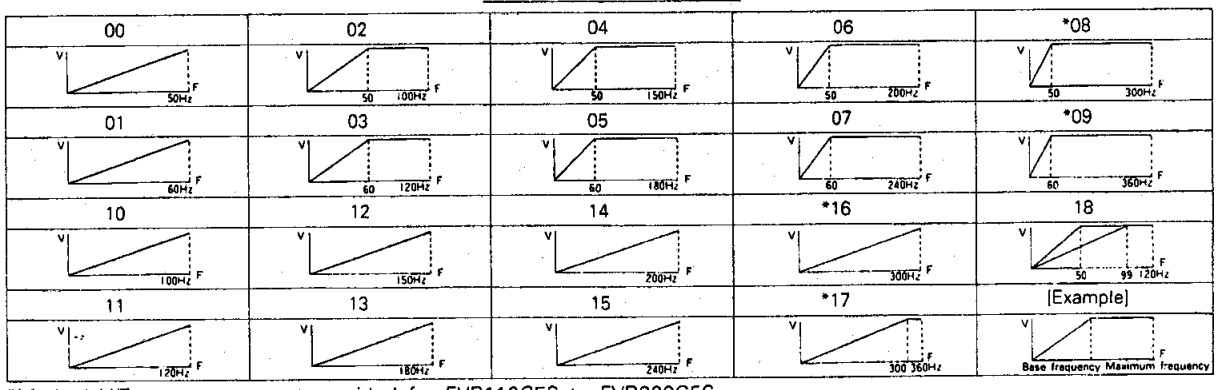

*Marked V/F patterns are not provided for FVR110G5S to FVR220G5S.

[Warning]

1. When a V/F pattern to be set does not match the base frequency, motor overheat or start up failure due to torque shortage may occur.
2. A 150 Hz overspeed limiter is incorporated to prevent danger. When setting a V/F pattern in which the maximum frequecy exceeds 150 Hz, be sure to change the overspeed limiter setting to 1501. Otherwise, frequency exceeding 150 Hz can not be optained.
3. When requiring to set the V/F pattern code to 18, please refer to the optional V/F pattern in the paragraph vii).

vi) Motor operating sound 11

The motor operating sound is influenced by the inverter PWM control. The noise can be reduced by changing the data code. It is unnecessary to change the data code if the sound is not a nuisance.

Operating Sound Code Table

Data code	00	01	02	03	04	05	06	07	08	09
Sound	Low sound ←					Normal	→ High sound			

Factory setting 1105

vii) Optional V/F pattern 26

The base frequency of the V/F pattern code "18" can be set to any value between 50 Hz and 99 Hz as required. In this case, the base frequency is used for the data code.

1018 : Setting the optional V/F pattern
26 : Setting the base frequency
} Be sure to set both.

50 ~ 90 [Hz]

Factory setting 2650

3) Special functions

The following functions do not operate with the factory setting. Change only the setting for the required function.

i) Upper limit, Lower limit 12 13

This function provides 16 pattern for setting of the Upper or Lower limit of the output frequency for the external frequency setting input.

Upper limit 12
Lower limit 13
} + % code (00~15)

Factory setting 1200 , 1300

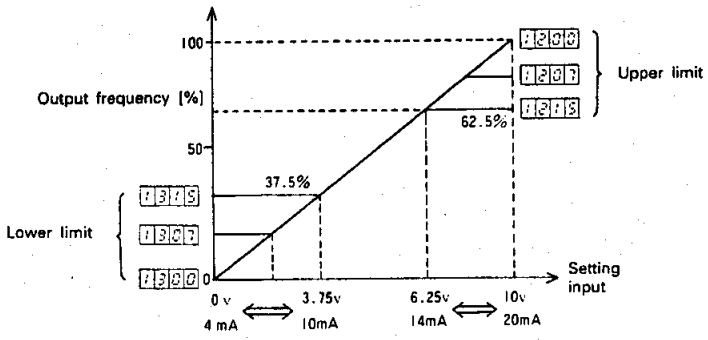

Upper limit % code

Data code	00	01	02	03	04	05	06	07	08	09	10	11	12	13	14	15
Upper limit frequency [%]	100	97.5	95	92.5	90	87.5	85	82.5	80	77.5	75	72.5	70	67.5	65	62.5

Lower limit % code

Data code	00	01	02	03	04	05	06	07	08	09	10	11	12	13	14	15
Lower limit frequency [%]	0	2.5	5	7.5	10	12.5	15	17.5	20	22.5	25	27.5	30	32.5	35	37.5

ii) Bias 14

This function can be used with the external frequency setting input. It is used when requiring that the setting frequency and motor speed are of linearity as in the case of spindle for machine tool drive.

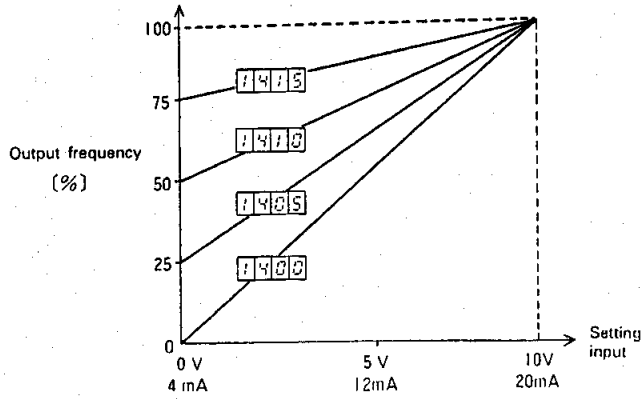

Bias % Code

Data code	00	01	02	03	04	05	06	07	08	09	10	11	12	13	14	15
Bias quantity [%]	0	5	10	15	20	25	30	35	40	45	50	55	60	65	70	75

Factory setting 1400

iii) Jump Frequency 1, 2, 3 ..... 16 17 18

This function allows the inverter to jumb ±0.5 Hz of a selected frequency so as to prevent resonance of machines or structures. The jump frequency can be set at three positions. To set, select the function code No. 16 (17, 18) and data code No. (Refer to the frequency code table page 7)

Jump frequency 1 16
Jump frequency 2 17
Jump frequency 3 18

Frequency code + 00~50 / 00~60

Factory setting

1600 , 1700 , 1800

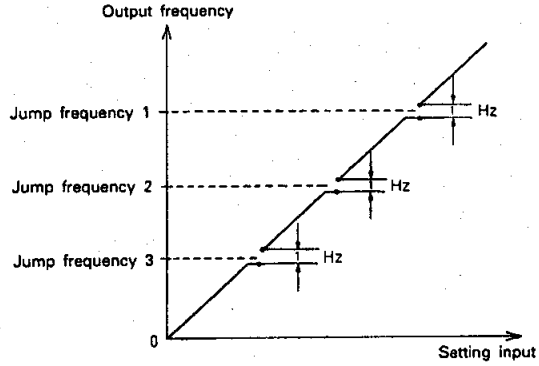

[Warning]

1. The jump frequency can not exceed 2 Hz.
2. When the multistep speed or jogging speed is equal to the jump frequency, a frequency of 0.5 Hz higher than the set value will be outputted.
3. The jump frequency does not function during the period of acceleration and deceleration.

iv) Inverter overload early warning signal 20

When the inverter output current exceeds the setting overload level for the period of over 10 sec, the open collector OL to CM is ON, and then, OFF one second after it has decreased below the setting overload level. The overload level can be set at 10 % interval between 110 % and 150 % of the inverter rated current.

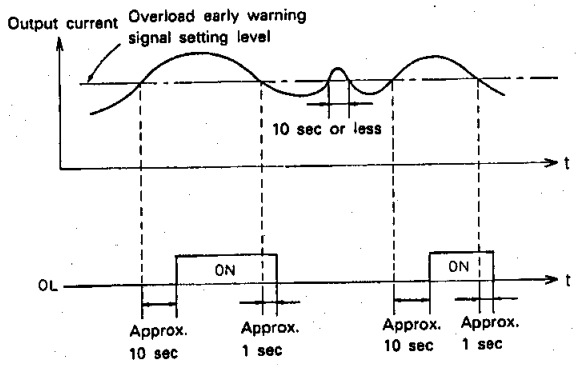

Over load % Code Table

Data code	00	01	02	03	04	05
Overload level [%]	No operation	110	120	130	140	150

Factory setting 2000

v) Frequency agreement signal 21

When the inverter output frequency agrees with the setting frequency, the open collector SAR-CM is ON for a period of time exceeding 0.1 sec. When the output frequency exceeds the setting frequency during the acceleration or deceleration period, it is continuously ON until the acceleration or deceleration has been completed. (Obtain the data code referring to the frequency code table, page 7.)

Factory setting 2100

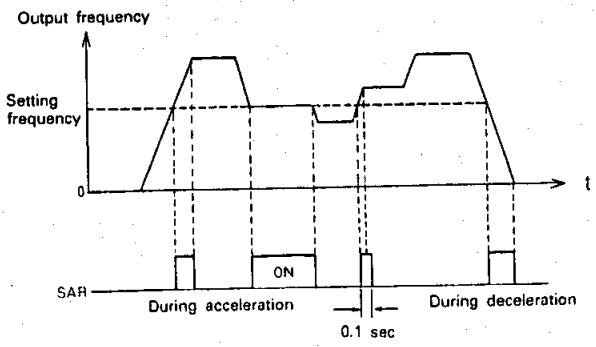

iv) Inverter stop signal 22

When the inverter output frequency reaches the setting stop signal frequency, the open collector SST-CM is ON. When the output frequency exceeds the setting frequency during deceleration, it is continuously ON until the deceleration has been completed. In this case, it is not ON even when the setting frequency is exceeded during acceleration. The stop signal frequency can be set to any value between 0.5 Hz and 3.0 Hz

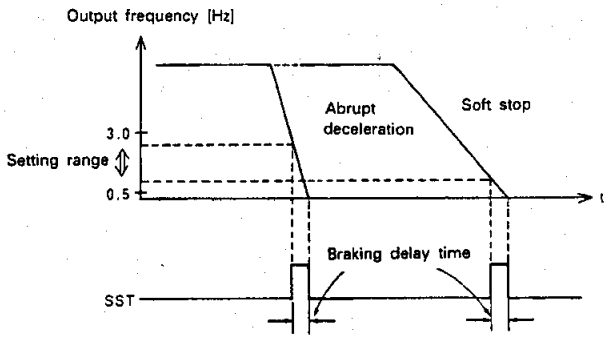

* Set the stop frequency so as to match the braking delay time

Stop Frequency Code Table

Data code	00	01	02	03	04	05
Stop signal frequency [Hz]	0.5	1.0	1.5	2.0	2.5	3.0

Factory setting 2200

vii) Stall prevention level control 24

This function is used to control so that the inverter output current does not exceed the limiting value, thus preventing the motor slip current from increasing. The current limiting value can be set to any value between 25 % and 95 % of 1.5 times the inverter rated current.

$$\text{Current limiting value (\%)} = \frac{\text{[Limiting current]}}{\text{[Inverter rated current]} \times 1.5} \times 100$$

Current % Code Table

Data code	00	01	02	03	04	05	06	07	08	09	10	11	12	13	14	15
Current limiting value (%)	No operation	95	90	85	80	75	70	65	60	55	50	45	40	35	30	25

Factory setting 2400

[Warning]

The stall prevention level control does not function during deceleration and constant speed.

viii) Automatic restart after instantaneous power failure/ commercial line ⟷ inverter operation 28

When an instantaneous power failure occurs for a period exceeding 15 ms, the protective function operates and the motor will coast to a stop. However, when this function is used, motor automatic restart will be carried out during the setting time instantaneous power failure protection period even when the motor rotates.

	(Automatic restart after instantaneous power failure)	(Commercial line ⟷ inverter operation)
2800	: No operation	No operation
2801	: Operation	Change with setting frequency
2802	: Operation	Change with 50 Hz
2803	: Operation	Change with 60 Hz
2804	: Operation	No operation

Use the OPC-07

Factory setting 2800

Instantaneous Power Failure Protection Time (Reference)

Inverter type FVR G5S	022	037	055	075	110	150	185	220
Instantaneous power failure protection time (sec)	0.8	2	3.5	4.5	7.5	8	9.5	14

[Warning]

1. The automatic restart after instantaneous power failure/commercial line ⟷ inverter operation function does not operate unless the function 19 (internal RUN/STOP operation, external RUN/STOP operation) is set so that the code is 1900.
2. The commercial line ⟷ inverter operation can not be carried out unless the option OPC-07 is installed in the inverter.

Function and data code list

■■□□	Function	□□■■	Description	Application	Factory setting
00	Display changing	00	Frequency display	Output Frequency [Hz]/Output current [A] 6000 ⟷ 123A	00
		01	Current display		
01	Multistep speed 1	00–60	frequency data code No.	Multistep speed operation (Control terminals X1 and X2 are used to select.)	10
02	Multistep speed 2				20
03	Multistep speed 3				30
04	Jogging speed			Jogging operation	05
05	Acceleration time (ACCEL 1)	00–31	Accel/Decel time data code No.	Set so as to match load GD². Shockless acceleration/deceleration Heavy load-light load selection	16
06	Deceleration time (DECEL 1)				
07	Accel/Decel time (ACCEL/DECEL 2)				
08	Electronic thermal overload	00–15	Thermal level code No.	Motor overload protection	00
09	Torque boost	00–15	Torque boost data code No.	Starting torque adjustment for use with fans, pumps	08
10	V/F pattern (V/F ratio)	00–18	V/F pattern data code No.	Can meet the requirements of high-speed motors and special motors.	01
11	Motor operating sound	00–09	Operating sound data code No.	High-low adjustment of motor sound	05
12	Upper limit	00–15	Upper limit ratio data code No.	Overspeed prevention due to excessive setting input	00
13	Lower limit	00–15	Lower limit ratio data code No.	Secures a fixed flow rate in a pumping system	00
14	Bias	00–15	Bias ratio data code No.	Motor slip speed compensation	00
15	Overspeed limiter	00	Over 150Hz operation is not available	Prevents overspeed due to improper setting of V/F pattern	00
		01	Over 150Hz operation is available		
16	Jump frequency 1	00–60	Frequency data code No.	Prevents resonance between motor and coupled machines.	00
17	Jump frequency 2				00
18	Jump frequency 3				00
19	Keypad panel operation external operation selection	00	External operation	Operation using relay or Programable Controller.	03
		01	External Automatic V/F	External operation with automatic accel eration of function	
		02	External automatic torque boost	External operation with automatic energy-saving function	
		03	Keypad panel operation	Operation via operating panel (keypad operation)	
20	Overload early warning signal	00–05	Overload setting value data code No.	Provides overload protection for inverter	00
21	Frequency agreement signal	00–60	frequency data code No.	Detects target frequency	00
22	Inverter stop signal	00–05	Stop signal frequency data code No.	Motor with brake	00
23	Brake torque selection	00	Normal torque brake	20 to 150% of motor rated torque	00
		01	High torque brake	Ensures 20 to 30% higher torque compared with normal brakes.	
		02	Normal torque brake + DC dynamic brake	When requiring a brake until motor comes to a standstill.	
24	Stall prevention level control	00–15	Current limiting value setting data code No.	For load requiring warm-up operation	00
25	Frequency setting method selection (analog/digital)	00	Digital setting from operating panel	Individual operation	00
		01	Analog setting through terminal input	Process control operation	
		02	Digital setting through binary code	Computer link (FA system, centralized control system)	
		03	Digital setting through BCD cide		
26	Optional V/F pattern	50–99	Base frequency [Hz]	When program code 1018 is set	50
27	Operating panel selection	00	Front operating panel	When remote control using option OPC-09 is carried out	00
		01	Remote control panel		
28	Automatic restart after instantaneous power failure. Commercial line — inverter operation selection.	00	No operation	Prevents troubles due to instantaneous power failure. Use the OPC-07 option card. For operation using commercial power.	00
		01	Change with setting frequency		
		02	Change with 50 [Hz]		
		03	Change with 60 [Hz]		
		04	Only automatic restart function		

8. Operation

1) Keypad operation 1903

i) Operating frequency

a) Operating panel digital setting 2500

It can be varied from 0.5 Hz up to the maximum frequency using the [△]/[▽] keys. It is also possible to store the running frequency by using [SET] key. (This is possible even during running or stop).

b) Control terminal analog output frequency setting 2501

There are two ways, i.e. voltage setting and current setting. The output frequency varies from 0.5 Hz up to the maximum frequency within the input range from 0 V to +10 V, 4mA to 20 mA. (When inputted simultaneously, they are added and the resulted value is set.)

* The setting input range can be changed from 0 V to − 10 V by changing the voltage setting input switching pin (J5) to the −10 side.

ii) Operating method

When the [RUN] key on the operating panel is pressed, the motor starts. It decelerates and comes to a complete standstill when the [STOP] key is pressed. (The rotating direction is determined depending on control terminals FWD and REV.)

* The inverter does not operate without FWD or REV signal.

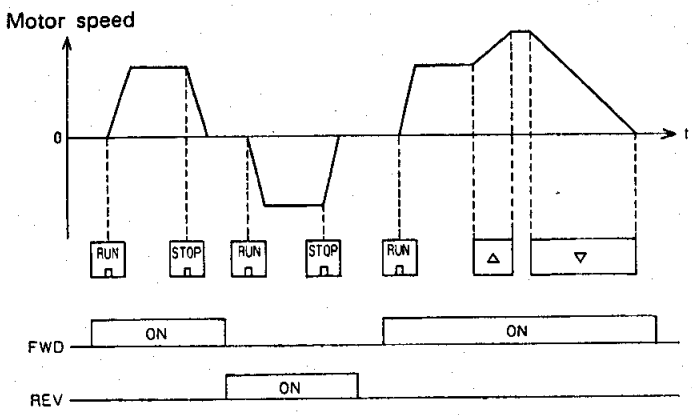

2) External RUN/STOP operation 1900 1901 1902

i) Operating frequency

a) Operating panel digital setting 2500

To set, follow the description in paragraph 8. 1), i), a).

b) Control terminal analog setting 2501

To set, follow the description in paragraph 8. 1), i), b).

ii) Operating method

When the control terminal FWD or REV is ON, the motor starts, and then, it stops when the terminal is OFF. (The RUN/STOP key on the operating panel will be ignored.)

* When the FWD and REV signals are overlapped, the motor will decelerate and come to a complete standstill.

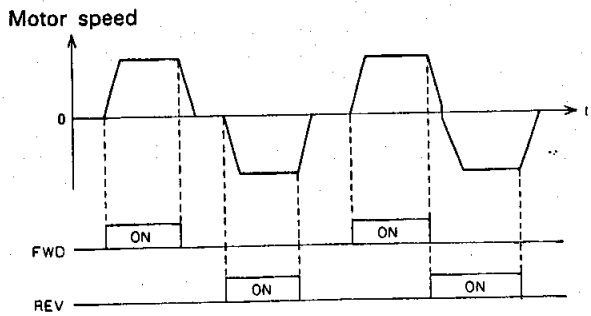

3) Multistep speed operation 1900 1901 1902

i) Operating frequency

To set, use the multistep speed (1st, 2nd and 3rd) 01 02 03

ii) Operating method

When the control terminal FWD or REV is closed (ON), the motor starts and it stops when these terminals are open (OFF). (The RUN/STOP key is ignored.) To select, use the control terminals X1 and X2.

Multistep speed 1st ..... CM ··· X1 X2

Multistep speed 2nd ..... CM ··· X1 X2

Multistep speed 3rd ..... CM ··· X1 X2

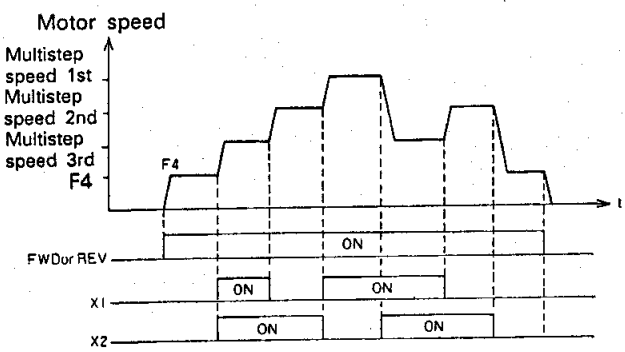

* F4 is a digital setting frequency on the operating panel (in case of 2500) or a control terminal analog setting frequency (in case of 2501).

4) Jogging operation 1900 1901 1902

i) Operating frequency

To set, use the jogging speed 04

ii) Operating method

When the control terminal FWD or REV and JOG are ON simultaneously, the jogging starts and it stops when these terminals are OFF simultaneously.

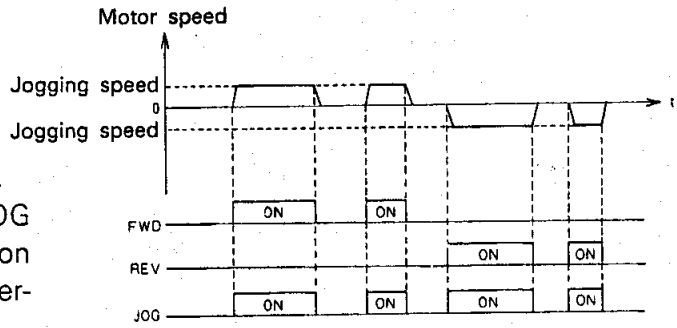

* When the control terminal X1 or X2 and JOG are ON simultaneously, Jogging operation takes precedence over Multistep speed operation.

5) 2nd acceleration time operation

A soft acceleration (deceleration) is carried out when the acceleration (deceleration) is started and completed. This ensures shockless short-time acceleration (deceleration).

1st accel/decel time ..... CM ··· SOFT

2nd accel/decel time ..... CM ··· SOFT

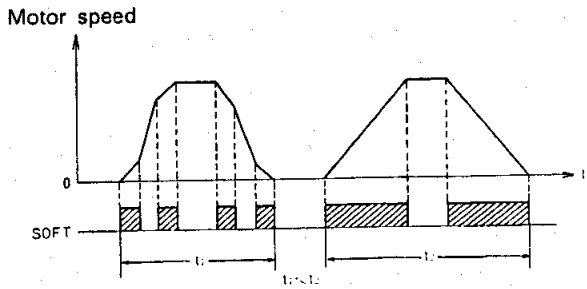

9. Maintenance and inspection

1) Inspection before operation

When the installation and wiring has been completed, carry out the inspection regarding the following matters before applying the power.

a) Check for miswiring. (Refer to Section 5.)
b) Check for wire chips left.
c) Check screws and terminals for tightness.
d) Check that the barbed wire of the crimp terminal is not in contact with other terminal.

2) Maintenance and inspection, and periodic replacement of parts

i) Maintenance and inspection

The inverter is a stationary equipment. However, a periodic inspection should be carried out so as to prevent troubles due to the aged deterioration or the life.

[Warning]

1. When carrying out an inspection, be sure to remove the power supply and wait until the CRG lamp goes out a few minute later.
2. To attach or detach the connector, be sure to hold the housing. Take a note of the correct position.

Maintenance and inspection points

Inspection point	Inspection item	Inspection subject	Remedy
General	Emvironment	• Ambient temperature (−10 to +40°C), Humidity (90% or less), Installation area vibration (0.5G or less)	Inspect the trouble and remove the cause.
	Power supply	• Input voltage (within ±10% of the rating)	Voltage adjustment
Main circuit	Tr, D module	• Discoloring, malodor • Loosened terminal screw	Replace the transistor module, tightening
	Smoothing capacitor	• Liquid leakage, swelling of casing • Electrostatic capacity (over 85% of the rating)	Replace.
	Resistor	• Discoloring, crack • Resistance value (within ±10% of displayed value)	Replace.
	Cable and wire	• Discoloring and crack of casing • Discontinuity	Replace.
	Others	• Deposit of dust • Looseness in tightened portion	Cleaning, tighten.
Printed circuit board	Hybrid IC	• Looseness in mounting	Vibration proofing
	Capacitor	• Swelling of casing	Replace.
	Resistor	• Discoloring, crack	Replace.
	Connector	• Loosening, loss	Prevent loosening.
Cooling system	Cooling fan	• Deposit of dust at the ventilating portion • Bearing noise	Cleaning Replace
	Cooling fin	• Deposit of dust on surfaces	Cleaning

ii) Periodic replacement of parts

The life of an inverter varies depending on the environment of installation and operating time. The life expectancy of the smoothing capacitor and the cooling fan are 5 years and 3 years respectively, when it is continuously operated within the allowable temperature range. It is recommendable for them to be replaced before troubles are experienced.

3) Measuring points and the meters

The inverter input/output voltage and current include a high frequency. Therefore, the measuring instruments must be selected properly. Otherwise, large error can be expected. When measuring the current using a CT, the error increases as the frequency decreases. Be sure to use ones whose capacity is as large as possible.

Measuring Point and meters

Measuring point		Rough measurement	Precision measurement
Input	Voltage	V-ohmmeter	Moving-iron type voltmeter
	Current	Clamp meter	Moving-iron type ammeter
	Power	–	Electrodynamometer-type wattmeter
Output	Voltage	V-ohmmeter	Rectifier type voltmeter
	Current	Clamp meter	Moving-iron type ammeter
	Power	–	Electrodynamometer-type wattmeter

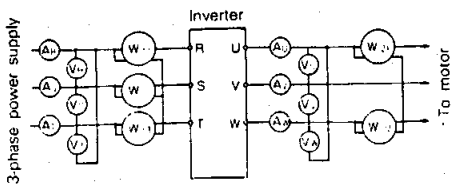

10. Failure Diagnosis

1) Remedy for displayed protective function to be operated

i) DC intermediate circuit abnormal voltage (OU: Overvoltage, LU: Undervoltage)

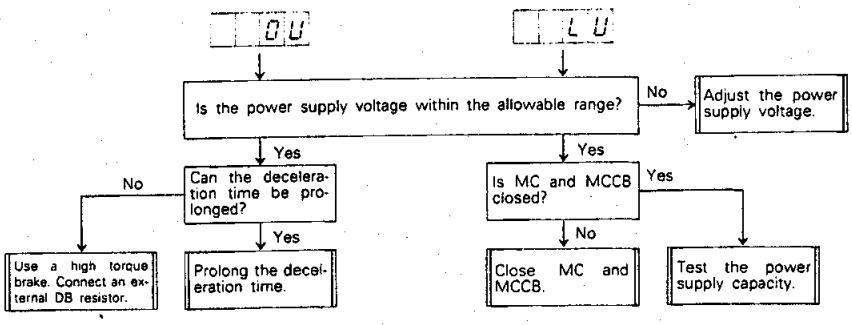

* When the power supply is ON or OFF, the LU will be displayed. However, this does not mean the abnormality.

ii) Inverter output overcurrent (OC1: during acceleration, OC2: during deceleration, OC3: during constant speed operation)

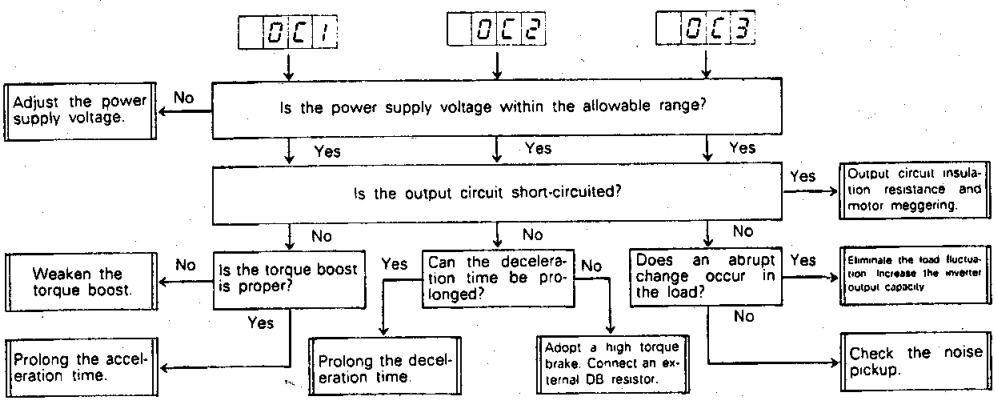

iii) Overheating (OL1: Inverter, external DB resistor, thermal overload relay, OL2: Electronic thermal overload)

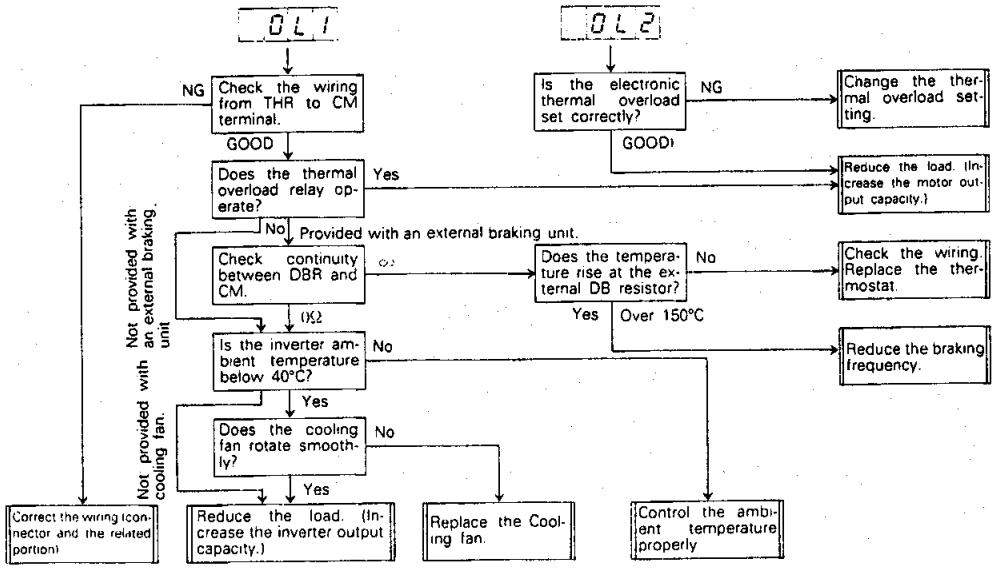

iv) CPU error

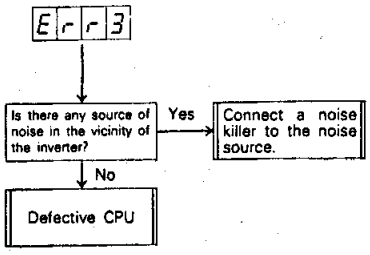

When the protection is displayed, the motor coasts to a stop. To clear, press the RESET key on the operating panel after having removed the cause referring to the flow chart as shown in the illustration above. (When pressing the RESET key, be sure to wait that the motor has come to a complete standstill.)

2) Remedy to be taken against abnormalities.

i) Motor is not running.

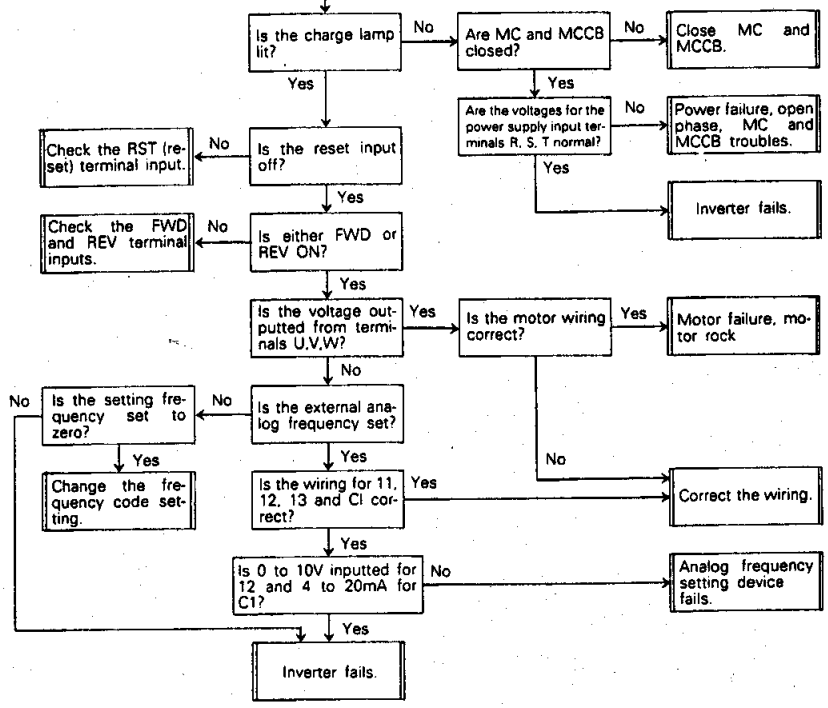

ii) Motor is running but speed does not change.

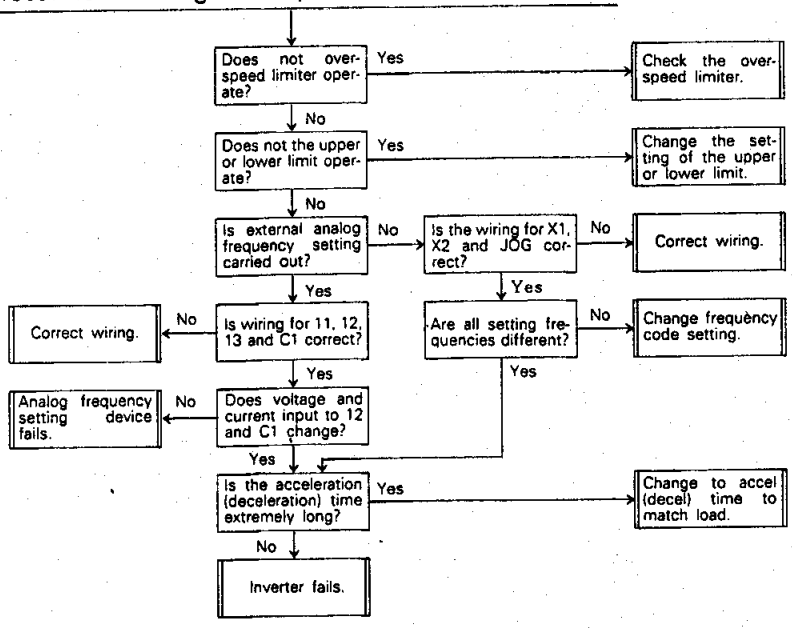

iii) Motor rotation is not smooth.

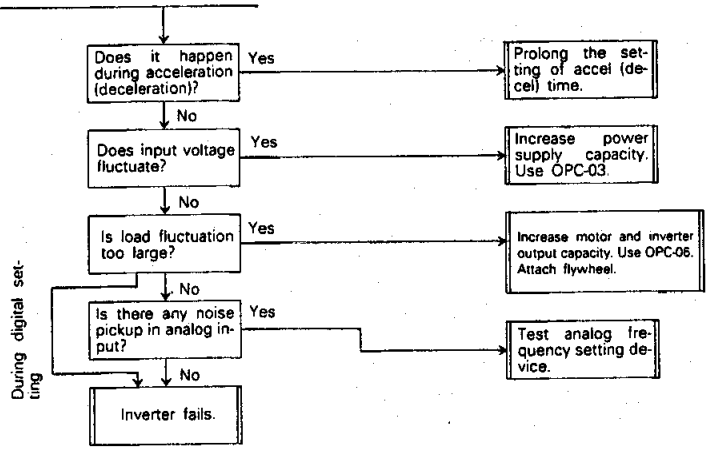

iv) Motor is abnormally heated.

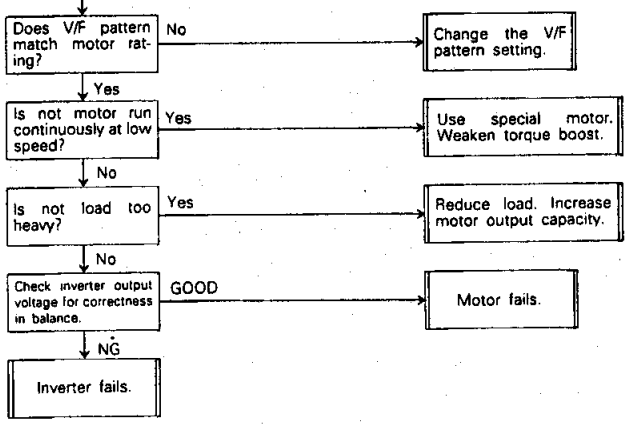

3) Noise interference suppression

i) External noise interference suppression

Attach following noise suppressor to the power supply input terminals. This ensures enhanced suppression against external noise interference.

Example 1

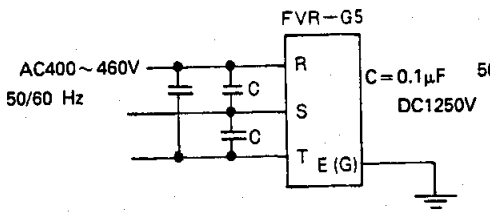

Example 2

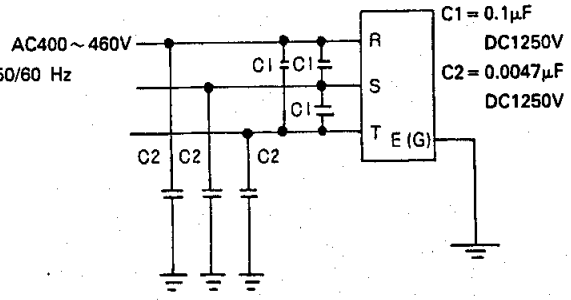

* When connecting C2, the malfunction of ELCB due to leakage current may be expected. Use a special noise suppressor so as to ensure enhanced effectiveness.

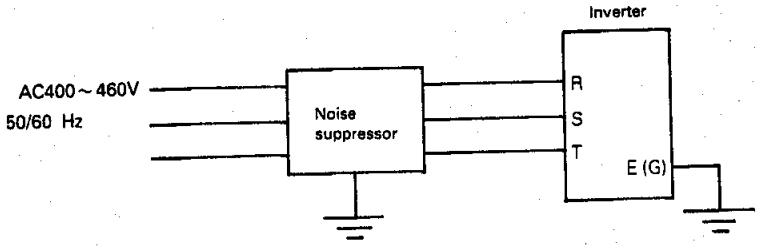

* When a noise suppressor is installed in the inverter output circuit, an inverter failure may be expected.

ii) Precautions for Noise source

Connect a CR filter (for AC circuit) or a diode (for DC circuit) in parallel with the coil of the magnetic contactors or relays so as to prevent noise interference.

a) Applying the CR filters and diodes (circuit voltage 250 V or less)

① CR filter capacity

S2-A-O C: 0.2 μF 500VDC, R: 500 Ω (OKAYA DENKI SANGYO)

S1-B-O C: 0.1 μF 500VDC, R: 200 Ω (OKAYA DENKI SANGYO)

② Diode capacity (in case operating coil current 1 A or less)

ERB240-06C 600 V 1 A (surge 45 A/10 mS)

Equipment		CR filter or diode
Magnetic contactor (Main circuit)	AC	S2-A-O or its equevalent
	DC	Diode or S2-A-O
Auxiliary relay	AC	S1-B-O or its equevalent
	DC	Diode or S1-B-O
Fluorescent lamp		S1-B-O
Solenoid Brake Clutch	AC	S2-A-O
	DC	Diode

b) Wiring example

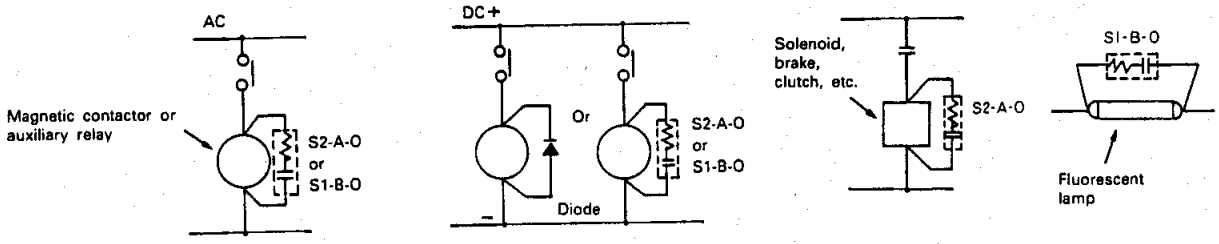

11. Specifications

1) Standard specifications

Inverter type	FVR 022G5S-4	FVR 037G5S-4	FVR 055G5S-4	FVR 075G5S-4	FVR 110G5S-4	FVR 150G5S-4	FVR 185G5S-4	FVR 220G5S-4
Applicable motor output [kW]	0.4~2.2	3.7	5.5	7.5	11	15	18.5	22
Inverter output at 460V [kVA]	4	6	9	13	17	22	28	33
Output current [A]	5	8.5	12	18	23	29	37	43
Weight [kg]	9	10	10.5	11	16	18.5	20.5	21.5

Input ratings	Power supply	3-phase 400 to 460V 50/60Hz
	Allowable variation	• Voltage: 360 to 506V • Frequency: ±5%
Output ratings	Output voltage	3-phase 400, 440, 460V (same as input voltage)
	Output frequency	• 50Hz, 60Hz, 100Hz, 120Hz, 150Hz, 180Hz, 200Hz, 240Hz • 300Hz, 360Hz :Up to 13kVA
	Frequency stability	• Digital setting: ±0.02% of maximum frequency (at 25°C ±10°C) • Analog setting : 0.5% of maximum frequency (at 25°C ±10°C)
	Overload capacity	150% for 1 minute (Inverse time characteristics) Provided with current limiter
Control specifications	Control system	Sinusoidal wave PWM control
	Frequency control range	• 0.5 to 360Hz (Up to 13kVA) • 2 to 240Hz (Over 17kVA)
	Analog frequency setting inputs	0 to −10V DC, 0 to +10V DC, 4 to 20mA DC
	Frequency resolution	• Digital setting: 0.01Hz step (at 0.5 to 60Hz) • Analog setting : 0.02Hz step (at 0.5 to 60Hz)
	V/F ratio and torque boost	• V/F ratio: 19-pattern, selectable modes with 50 to 99Hz V/F adjustment, Automatic V/F, Jump frequency control • Torque boost: 16 selectable modes with Automatic torque boost
	Acceleration/deceleration time	0.06 to 1800 sec. (independently adjustable acceleration and deceleration.)
	Braking torque	• Regenerative braking: 20 to 150% • DC dynamic braking (at 0.5Hz or less: Up to 13kVA, 2Hz or less: Over 17kVA)
	Jogging operation	Fine adjustment
	Operating sound selection	10-pattern selectable modes (Carrier frequency control)
Protection	Stall prevention	When the motor current reaches the maximum limit on acceleration or deceleration the frequency change is suppressed, so preventing overcurrent or overvoltage trip.
	Instantaneous power failure	• The inverter operates through a power interruption of 15 msec or less. • If the failure is longer than 15 msec, the inverter restarts automatically.
	External output signal	Fault alarm signal (1 Form C, 250V AC 2A), Inverter stop signal, Frequency agreement signal, Overload early warning signal.
	Inverter trip and error message	Overvoltage (OU), Undervoltage (LU), Overcurrent while acceleration (OC1), Overcurrent while deceleration (OC2), Overcurrent while running (OC3) Inverter heat sink overheating, External thermal OL relay trip (OL1) Electronic thermal OL trip (OL2), Operating error (Err1), CPU error (Err3),
Indication	7-segment digital display	• Actual frequency, Load current • Error message • Setting data (Function code and data code No.)
	Frequency level indicator	0 to 100% (10% steps): Actual frequency or setting frequency is indicated.
Condition	Installation location	Indoor not more than 1000m above sea level. Do not install in a dusty location or expose to corrosive gases or direct rays of the sun.
	Ambient temperature, humidity	• −10°C to +40°C (−10°C to 50°C: When mounted inside the switchboard) • 90% RH or less (non-condensing)
	Cooling system	• Self-cooling type (Up to 4kVA), • Forced air-cooling type (Over 6kVA)
Plug-in type option PC boards		• Synchronized operation • Relay output • AVR • 8 bit digital input interface • Analog frequency meter interface • PG feedback • Backup operation • Remote operating panel • Remote digital display
Application		Machine tools, Conveyers, Winders, Grinding machines (Constant torque and constant output loads)

2) Description of the input/output terminals

	Symbol	Terminal names	Description
Main circuit	R.S.T.	Commercial power input terminal	Commercial power 400 to 460V AC is connected.
	U.V.W.	Inverter output terminal	3-phase induction motor terminal
	DB1, DB2	External DB resistor terminals *1	External DB resistor is connected between DB1 and DB2.
Control circuit	11	Frequency control common terminal	Common terminal for voltage and current setting (Do not ground, since this is not isolated from CM)
	12	Frequency control input terminal *2	When any value from 0V DC to ± 10V DC is inputted, the maximum frequency is reached at ± 10V and in proportion until 0V is reached. Input impedance is 22kΩ.
	13	Frequency control power supply terminal	Stabilized power supply +10V DC, 10mA or less (for terminal 11)
	C1	Frequency control auxiliary terminal	When any value from 4 to 20mA is inputted, the maximum frequency is reached at 20mA and in proportion until 4mA is reached.
	CM	Control circuit common terminal	Common terminal for control input/output signal (Do not ground, since terminal 11 is not isolated.)
	FWD REV	Forward command signal terminal Reverse command signal terminal	Forward command signal via CM, FWD and reverse command signal via CM, REV. (Inverter decelerates and comes to a complete standstill via CM, FWD, REV.)
	BX	Coast-to-stop input terminal	Coast-to-stop via BX, CM (Used to apply mechanical brake during inverter operation)
	JOG	Jogging command input terminal	Operation at jogging speed via CM, JOG (JOG has priority to X1, X2)
	X1 X2	Multistep speed operation command input terminal 1 Multistep speed operation command input terminal 2	Multistep speed 1 via CM, X1, multistep speed 2 via CM, X2, multistep speed 3 via CM, X1, X2 (When no input is made to X1 or X2, operation is carried out with external setting frequency.)
	SOFT	2nd accel/decel time command input terminal	Change to 2nd accel/decel time via CM, SOFT (When input is not made to SOFT, operation is carried out with normal 1st accel/decel time.)
	THR	External thermal overload relay, external DB resistor thermostat terminal	Motor coasts to a stop, when CM, THR is open. (When neither external thermal overload nor external DB resistor is available, inverter can not be operated unless the THR and CM is short-circuited.)
	RST	Reset signal input terminal	Protective function is reset when CM and RST is short-circuited for over 0.1sec. (If input is made to FWD and REV, restart is made the moment reset is made.)
	FM	Frequency meter terminal	+10 is outputted when the maximum frequency is reached and inproportion until 0V is reached. DC voltmeter (7 to 10V)...internal resistor over 10kΩ DC ammeter (1mA)...10kΩ1/2 is connected in series.
		Digital counter terminal	Outputted as a pulse train via FM terminal. Pulse frequency = Output frequency × n

Maximum frequency [Hz]	50	60	100	120	150	180	200	240	300	360
n	24	24	12	12	8	8	6	6	4	4

*1. Standard type inverter equipped no DB transistor can't apply the external DB braking resistor unit.
*2. When inputting any one from 0 to −10V, change the pin (J5) to −10 side. 11 is for 0V and 12 for 0 to −10V. Do not connect any to 13.

Control circuit	SST	Inverter stopping signal output terminal	When the frequency set with function code "22" is reached during deceleration, SST and CM are ON. (Open collector output, 27V, 50mA max.)
	SAR	Frequency agreement signal output terminal	When the frequency set with function code "21" is reached, SAR and CM are ON. (Open collector output, 27V, 50mA max.)
	OL	Inverter overload early warning signal output terminal	When the output current set with function code "20", is exceeded for over 10sec, OL and CM are ON. (Open collector output, 27V, 50mA max.)
	30A 30B 30C	Inverter fault signal output terminal	Output is made via 1 Form contacts to indicate that inverter protective function operates. (Contact capacity for resistance load 230VAC. 2A, 30VDC, 2A) 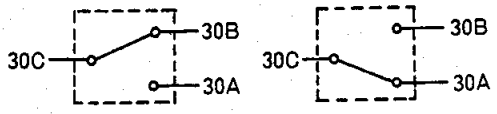 (Normal) (Fault)

3) Selecting the distribution and control equipment

i) D & C equipment

Motor output [kW]		0.4	0.75	1.5	2.2	3.7	5.5	7.5	11	15	18.5	22
Inverter type		FVR022G5S-4				FVR037 G5S-4	FVR055 G5S-4	FVR075 G5S-4	FVR110 G5S-4	FVR150 G5S-4	FVR185 G5S-4	FVR220 G5S-4
Inverter output [kVA]		4				6	9	13	17	22	28	33
Applicable wire size [mm²]	Main circuit	1.25 (3.5)				1.25 (3.5)	2 (5.5)	3.5 (5.5)	5.5 (8)	5.5 (14)	5.5 (14)	14 (22)
	Control circuit	0.5 (1.25)										
FAB		SA33/15				SA33/15	SA33/30	SA33/30	SA33/30	SA53/40	SA53/50	SA53/50
Fuse [A]		10				20	30	30	30	40	60	60
Magnetic contactor		SRC3631-05				SRC3631-05	SRC3631-5-1	SRC3631-5-1	SC-1N	SC-2N	SC-3N	SC-4N
Thermal overload relay		TR-1SN (0.8～1.2)	TR-1SN (1.4～2.2)	TR-1SN (2.8～4.2)	TR-1SN (4～6)	TR-1SN (6～9)	TR-1SN (9～13)	TR-3N (12～18)	TR-3N (18～26)	TR-3N (24～36)	TR-3N (28～40)	TR-3N (34～50)
Spark killer		S2-A (for magnetic contactors), S1-B (for control relay and timer)										

ii) External braking unit

Type		DB022-4				DB037-4	DB055-4	DB075-4	DB150-4		DB185-4	DB220-4
Resistor	Capacity [kW]	0.4				0.4	0.8	1.2	2.0		2.4	2.8
	Resistance [Ω]	200				150	100	66.7	40		33	28.6
Applicable inverter		FVR022G5S-4DB				FVR037 G5S-4DB	FVR055 G5S-4DB	FVR075 G5S-4DB	FVR110G5-4DB FVR150G5S-4DB		FVR185 G5S-4DB	FVR220 G5S-4DB
Outline drawing		A				A	B	B	C		C	D
Motor output [kW]		0.4	0.75	1.5	2.2	3.7	5.5	7.5	11	15	18.5	22
Average braking torque [%]		150	150	150	100	100	100	100	100	100	100	100
Allowable braking characteristics	Allowable braking frequency [%]	50	30	15	15	10	10	10	10	10	10	10
	Continuous allowable braking time [sec]	120	120	60	30	30	20	20	20	20	20	20
Inverter [kVA]		4				6	9	13	17	22	28	33

4) Outline dimensions, mm

i) Inverter unit

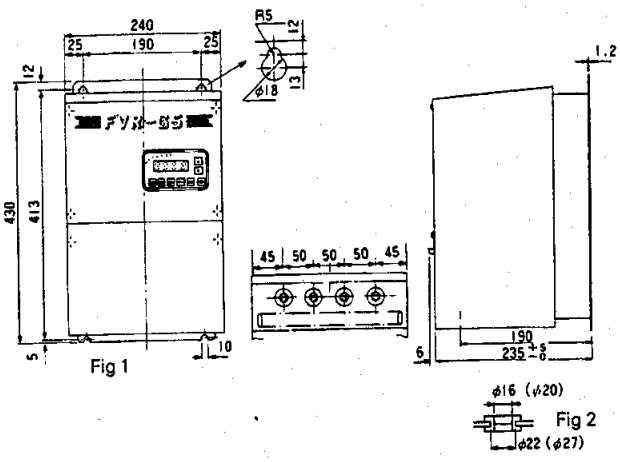

Fig 1

Fig 2

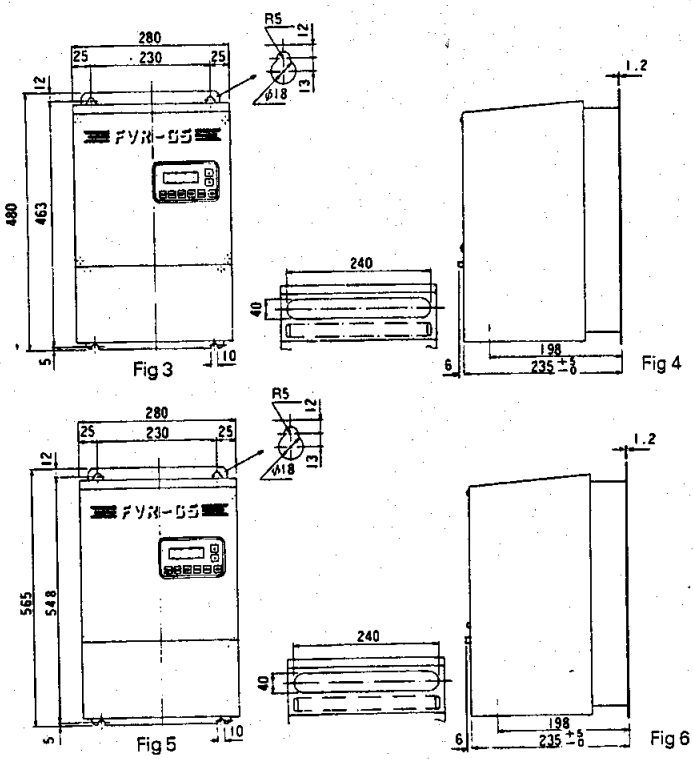

Fig 3

Fig 4

Fig 5

Fig 6

* Dimmensions in ( ) show for FVR055 and FVR075.

Type / Fig No.	FVR022 G5S-4	FVR037 G5S-4	FVR055 G5S-4	FVR075 G5S-4	FVR110 G5S-4	FVR150 G5S-4	FVR185 G5S-4	FVR220 G5S-4
Front view	Fig 1	Fig 1	Fig 1	Fig 1	Fig 3	Fig 3	Fig 5	Fig 5
Side view	Fig 2	Fig 2	Fig 2	Fig 2	Fig 4	Fig 4	Fig 6	Fig 6

ii) Braking resistor

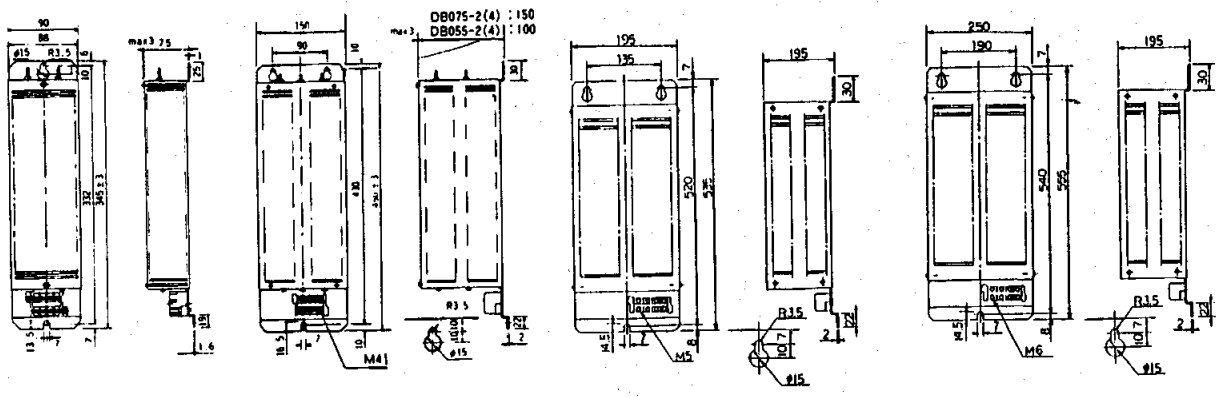

Fig A

Fig B

Fig C

Fig D

Function and data code list

■■□□	Function	□□■■	Description	Application	Factory setting
00	Display changing	00	Frequency display	Output Frequency [Hz]/Output current [A] 6000 ⟷ 123A	00
		01	Current display		
01	Multistep speed 1	00–60	frequency data code No.	Multistep speed operation (Control terminals X1 and X2 are used to select.)	10
02	Multistep speed 2				20
03	Multistep speed 3				30
04	Jogging speed			Jogging operation	05
05	Acceleration time (ACCEL 1)	00–31	Accel/Decel time data code No.	Set so as to match load GD². Shockless acceleration/deceleration Heavy load-light load selection	16
06	Deceleration time (DECEL 1)				
07	Accel/Decel time (ACCEL/DECEL 2)				
08	Electronic thermal overload	00–15	Thermal level code No.	Motor overload protection	00
09	Torque boost	00–15	Torque boost data code No.	Starting torque adjustment for use with fans, pumps	08
10	V/F pattern (V/F ratio)	00–18	V/F pattern data code No.	Can meet the requirements of high-speed motors and special motors.	01
11	Motor operating sound	00–09	Operating sound data code No.	High-low adjustment of motor sound	05
12	Upper limit	00–15	Upper limit ratio data code No.	Overspeed prevention due to excessive setting input	00
13	Lower limit	00–15	Lower limit ratio data code No.	Secures a fixed flow rate in a pumping system	00
14	Bias	00–15	Bias ratio data code No.	Motor slip speed compensation	00
15	Overspeed limiter	00	Over 150Hz operation is not available	Prevents overspeed due to improper setting of V/F pattern	00
		01	Over 150Hz operation is available		
16	Jump frequency 1	00–60	Frequency data code No.	Prevents resonance between motor and coupled machines.	00
17	Jump frequency 2				00
18	Jump frequency 3				00
19	Keypad panel operation external operation selection	00	External operation	Operation using relay or Programable Controller.	03
		01	External Automatic V/F	External operation with automatic accel eration of function	
		02	External automatic torque boost	External operation with automatic energy-saving function	
		03	Keypad panel operation	Operation via operating panel (keypad operation)	
20	Overload early warning signal	00–05	Overload setting value data code No.	Provides overload protection for inverter	00
21	Frequency agreement signal	00–60	frequency data code No.	Detects target frequency	00
22	Inverter stop signal	00–05	Stop signal frequency data code No.	Motor with brake	00
23	Brake torque selection	00	Normal torque brake	20 to 150% of motor rated torque	00
		01	High torque brake	Ensures 20 to 30% higher torque compared with normal brakes.	
		02	Normal torque brake + DC dynamic brake	When requiring a brake until motor comes to a standstill.	
24	Stall prevention level control	00–15	Current limiting value setting data code No.	For load requiring warm-up operation	00
25	Frequency setting method selection (analog/digital)	00	Digital setting from operating panel	Individual operation	00
		01	Analog setting through terminal input	Process control operation	
		02	Digital setting through binary code	Computer link (FA system, centralized control system)	
		03	Digital setting through BCD cide		
26	Optional V/F pattern	50–99	Base frequency [Hz]	When program code 1018 is set	50
27	Operating panel selection	00	Front operating panel	When remote control using option OPC-09 is carried out	00
		01	Remote control panel		
28	Automatic restart after instantaneous power failure. Commercial line — inverter operation selection.	00	No operation	Prevents troubles due to instantaneous power failure. Use the OPC-07 option card. For operation using commercial power.	00
		01	Change with setting frequency		
		02	Change with 50 [Hz]		
		03	Change with 60 [Hz]		
		04	Only automatic restart function		